2. RATIOED LOGIC

BJT RTL INVERTER

- RTL = Resistor to Transistor Logic
- The value of load resistance R is significant

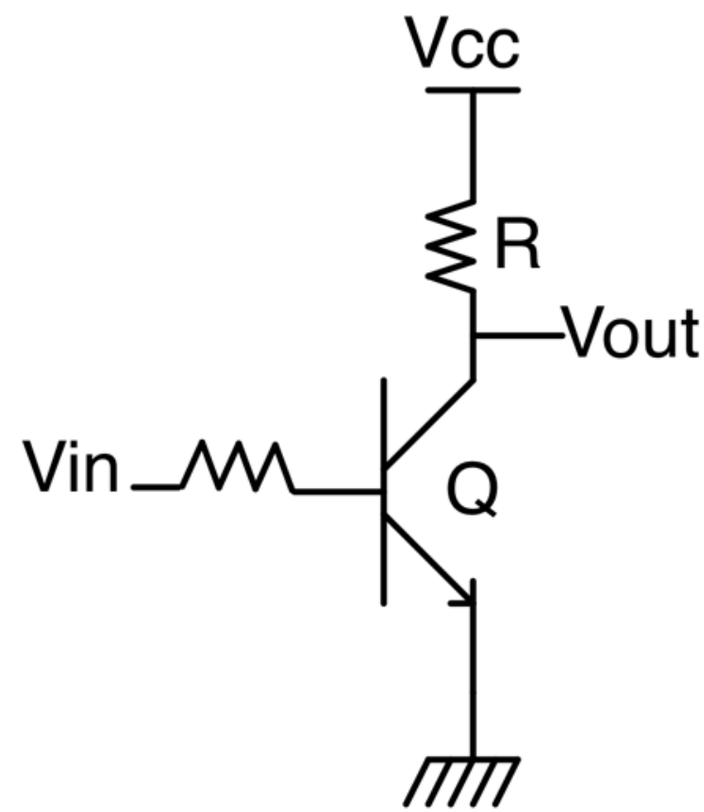

DETERMINING '1' AT THE OUTPUT

- To find '1' at the output, apply '0' at the input
- Vin = 0V (?)
- Q off
- Collector current = 0
- Vout = Vcc

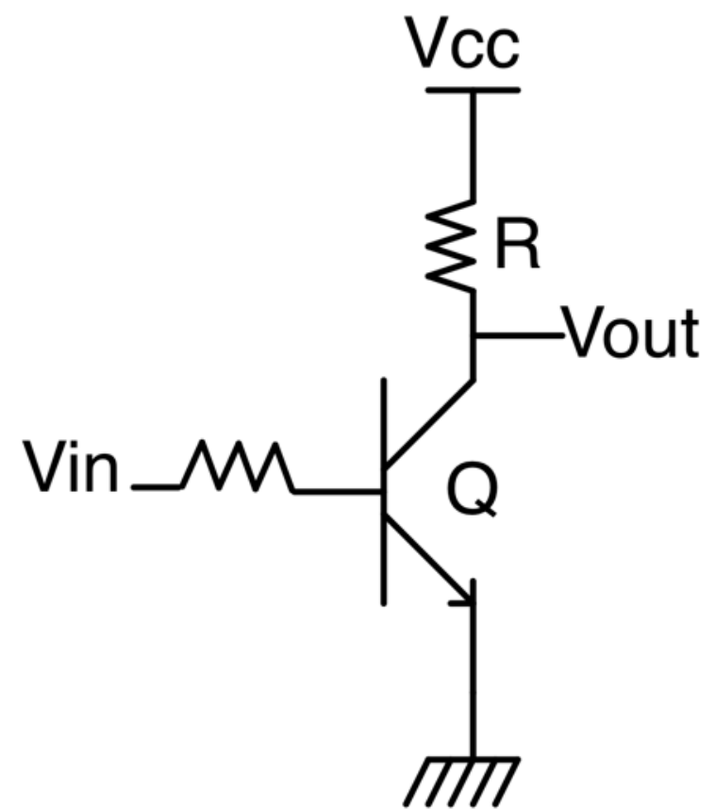

DETERMINING '0' AT THE OUTPUT

- Apply '1' at the input
- Vin = Vcc
- Q is saturated
- Vout = Vcesat = 0.1-0.3 V

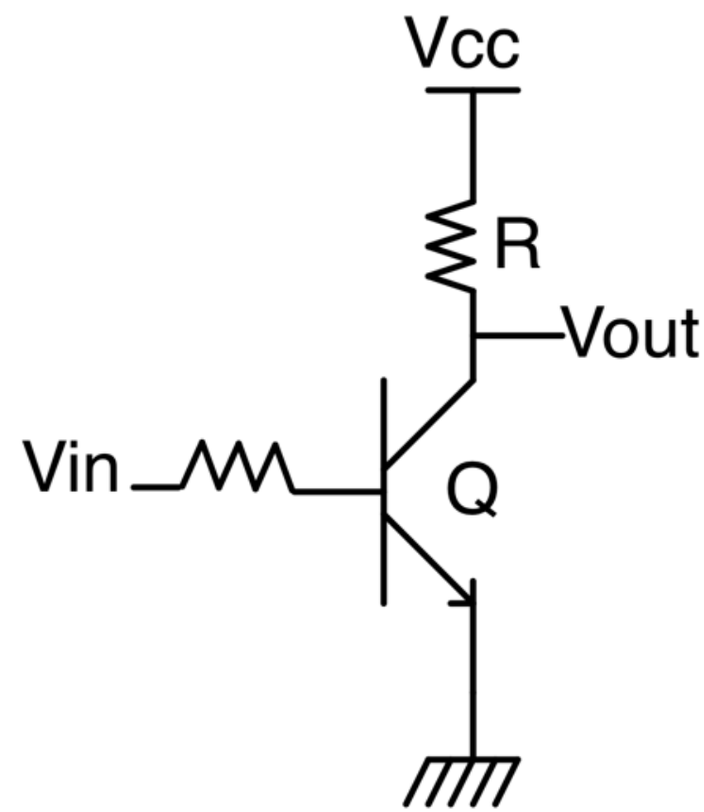

ELECTRICAL TRUTH TABLES

Logic in	Vin	Q region	Current	Logic out	Vout
0’	Low enough for	Off	Zero	1’	Vcc
1’	Very high, e.g. Vcc	Saturation	Non-zero	0’	Vcesat

OPEN QUESTIONS

- What are the proper values of Vin
- How does the inverter function as part of a larger circuit?

LOGIC VERSUS ELECTRICAL VALUES

- How to maximize noise margins?

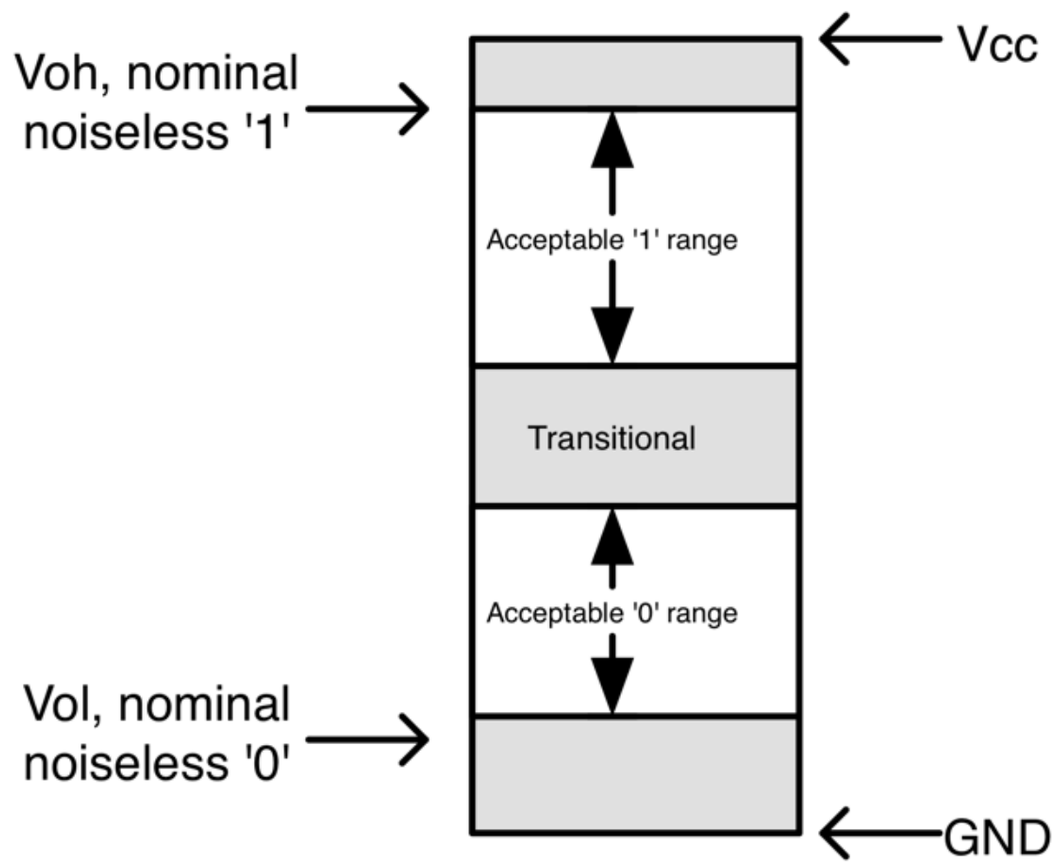

PROPER VALUES FOR VIN

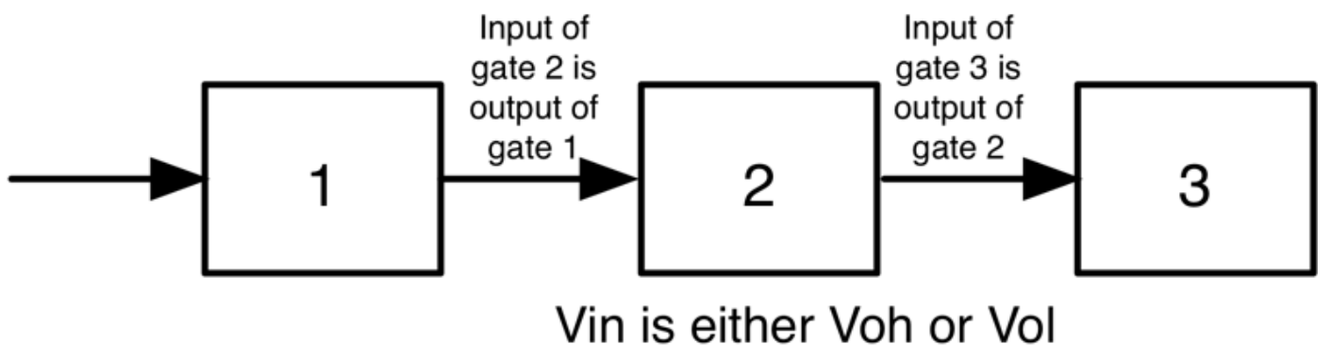

- Always assume input comes from a gate from the same family

FANOUT OF BJT INVERTER

- An inverter will feed gates from the same family
- Assume it is feeding N inverters
- They all draw base current

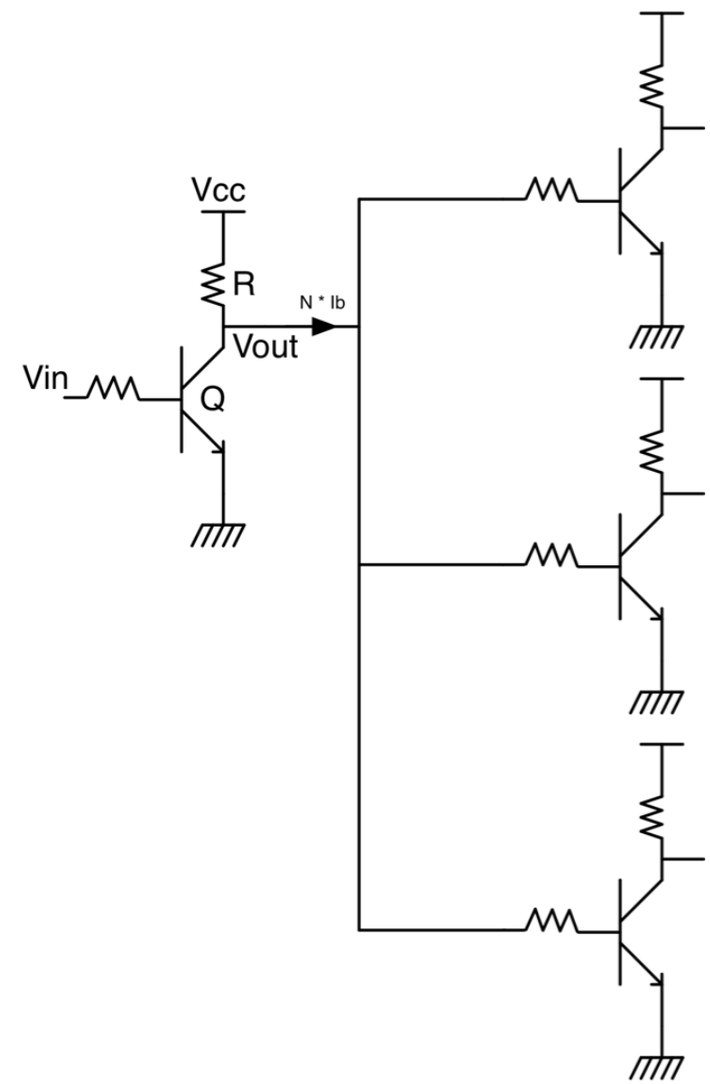

FANOUT OF BJT INVERTER

$$V_{out} = V_{CC} - NI_B R$$

$$V_{\min} = V_{CC} - NI_B R$$

$$N = \frac{V_{CC} - V_{\min}}{I_B R}$$

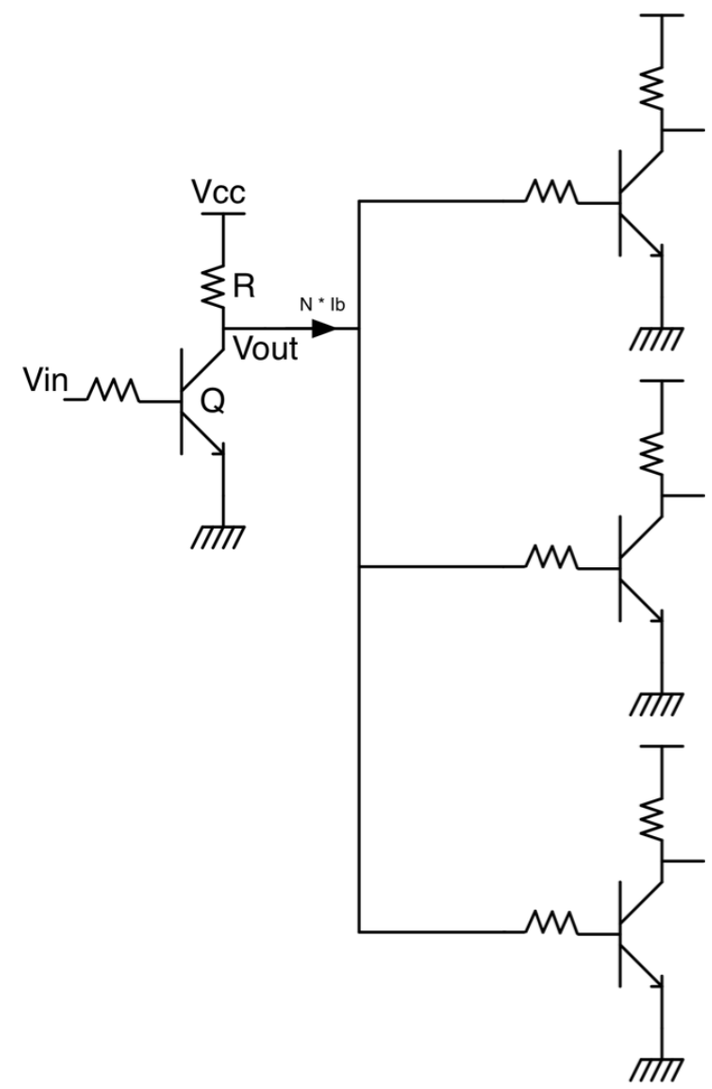

BJT CANNOT GENERALLY SHARE A SUBSTRATE

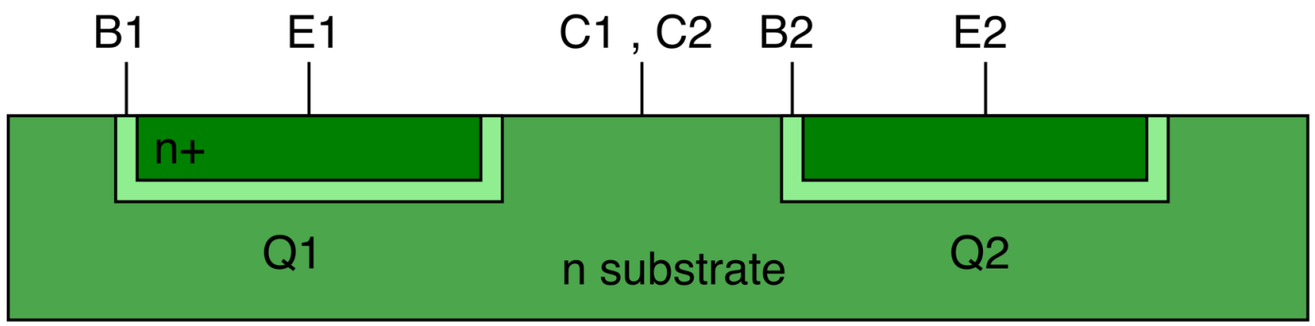

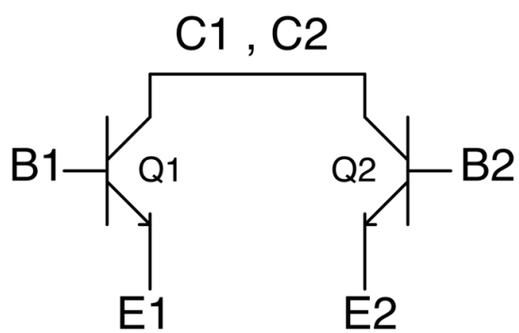

GUARD RINGS FOR BJT

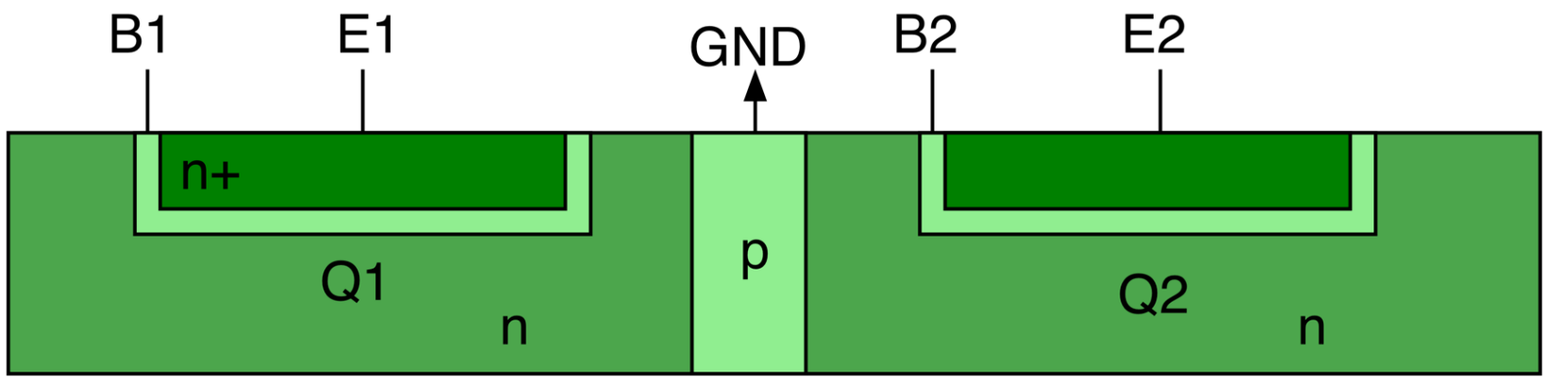

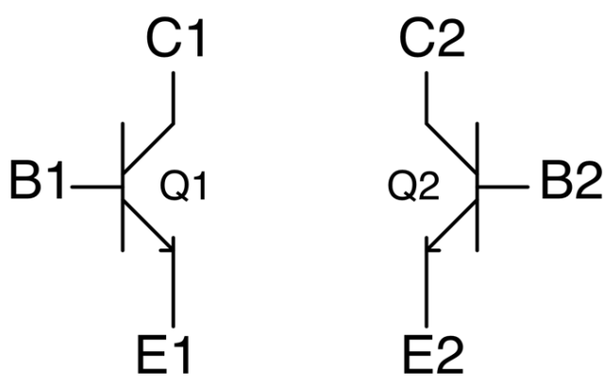

MOSFET SELF ISOLATION

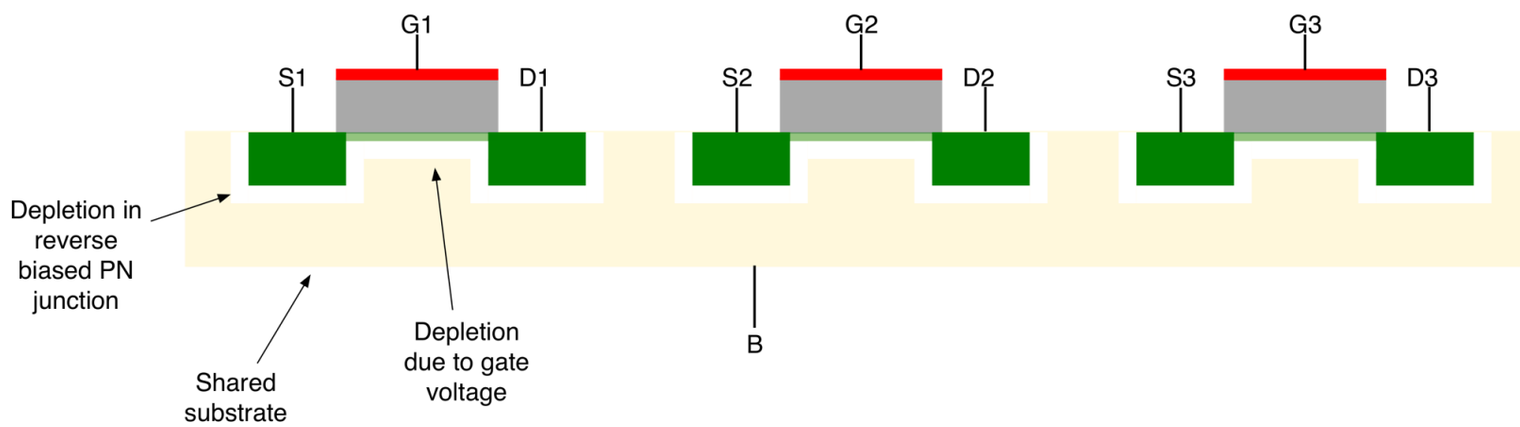

BUT IS THERE ANYTHING ATTRACTIVE ABOUT BJT?

- Its parasitic capacitance is lower by default
- Its current is generally higher
- Better delay

THE HEAD OF THE FAMILY

- The inverter is the most important representative of a logic family
- Its behavior is indicative of the behavior of more complex gates
- What are the features of the RTL inverter?

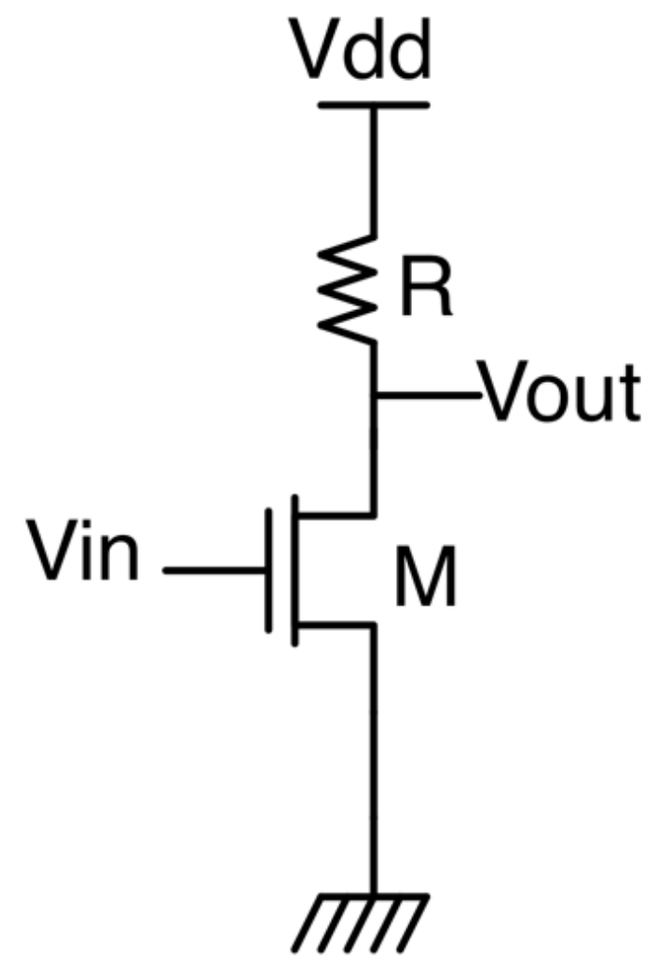

FINDING VOH AND VOL

- To find Voh, use input=Vol
- To find Vol, use input=Voh
- This is circular logic
- The cycle must be broken at some point

FINDING VOH

- KCL at output node (only possible equation)
- In steady state Ir=Im
- Region of operation?
- Use Vin=0V to find Voh (is this “wrong”?)
- M cutoff
- Ir=Im=0
- Voh=Vdd
- No effect from fanout

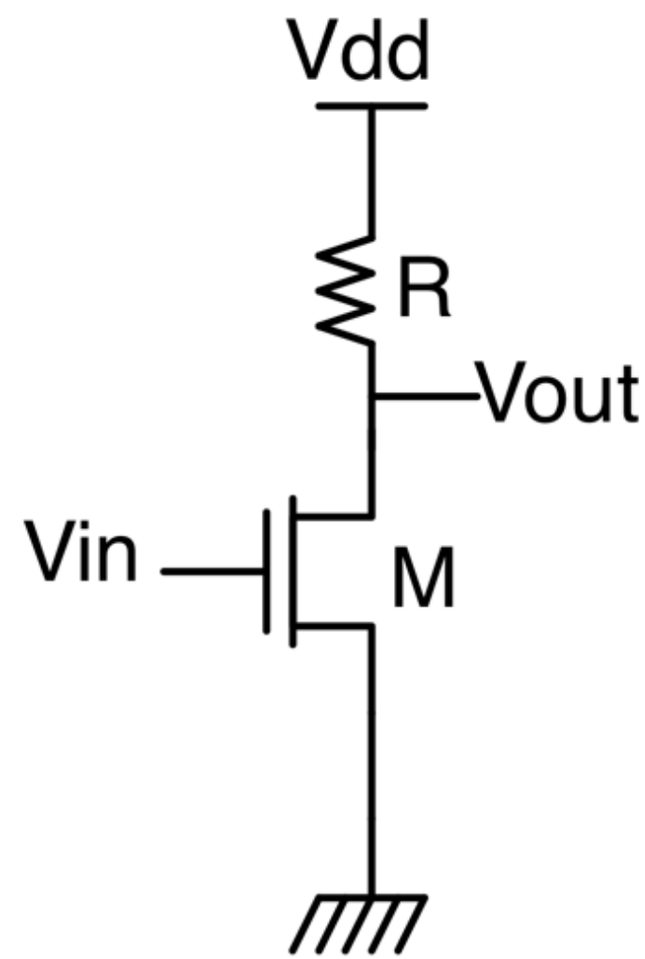

FINDING VOL

- Use the same KCL equation
- Vin=Voh=Vdd
- M is by necessity on
- But is it ohmic or sat?

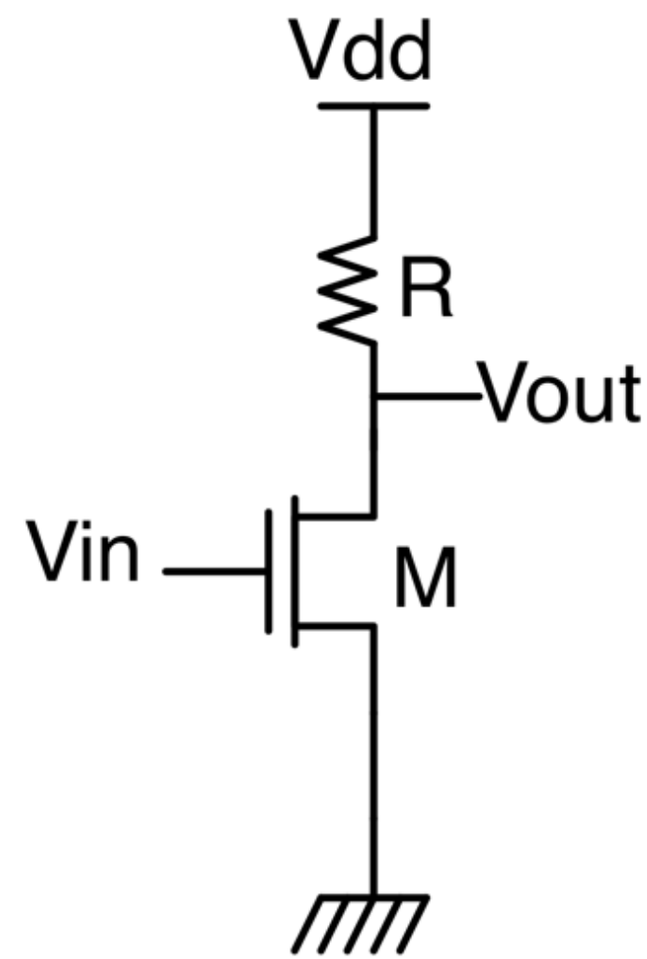

SOLVING FOR VOL

$$I_M = I_R$$

$$K((V_{GS} - V_{th})V_{DS} - V_{DS}^2/2) = (V_{DD} - V_{out})/R$$

$$K((V_{in} - V_{th})V_{out} - V_{out}^2/2) = (V_{DD} - V_{out})/R$$

$$K((V_{DD} - V_{th})V_{ol} - V_{ol}^2/2) = (V_{DD} - V_{ol})/R$$

Solve and obtain only one valid solution

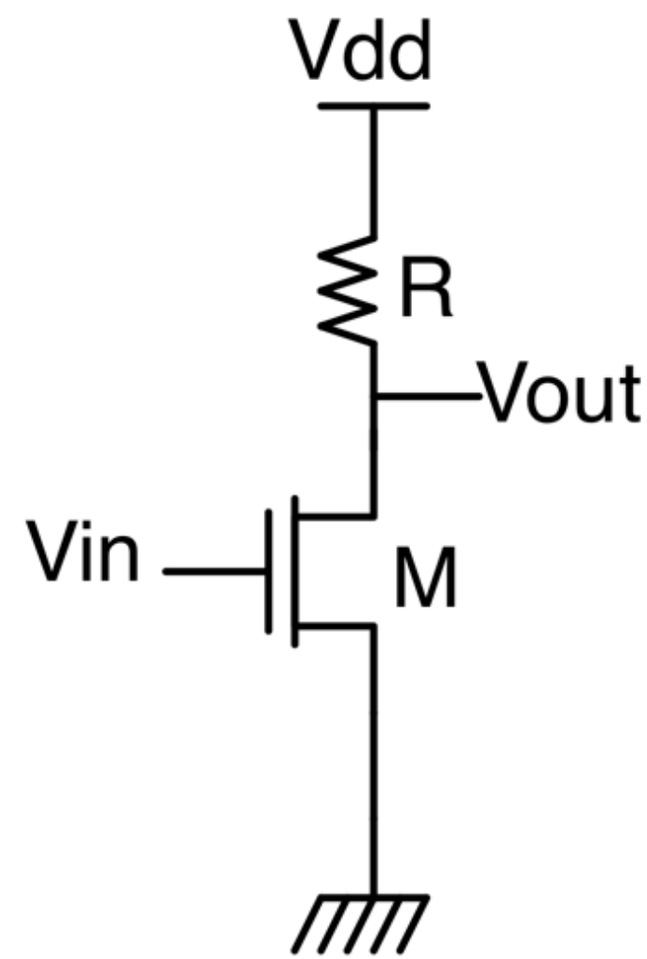

THE ELECTRICAL TRUTH TABLE

Logic in	Vin	M region	Current	Logic out	Vout
0’	Vol	Cutoff	Zero	1’	Vdd
1’	Voh=Vdd	Ohmic	Non-zero	0’	Vol

THE CONUNDRUM OF VOL

- Voh=Vdd
- Vol can never be equal to zero
- It also involves static current flow

MANAGING VOL

- To modulate the value of Vol
  - Change the value of R
  - Change the size of M
- Observe a voltage divider
  - Increase R
  - Increase W/L
- The price is always area

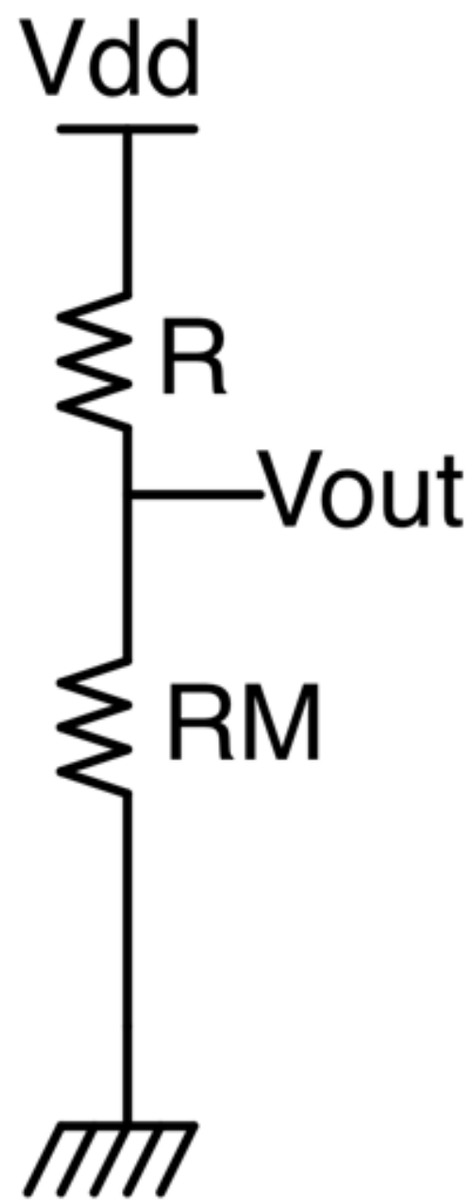

ZERO CURRENT FLOW

- A transistor can have no current flow for two reasons:
  - The transistor is cutoff, there is no channel
  - The transistor has an open drain, but a channel exists
- The two situations have significant ramifications on switch design using MOSFET

OPEN DRAIN TRANSISTOR

- This NMOS has an open drain
- No current can flow through it
- However Vgs>Vth, thus it is on

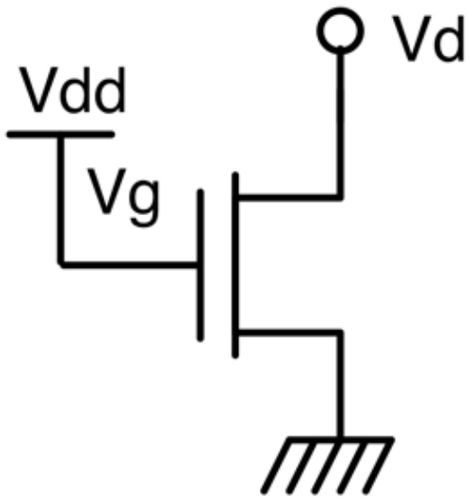

Fig.2.8.2. Open drained NMOS.

ZERO DROP

- The transistor cannot possibly be saturated (why?)
- The only solution is zero drop ohmic
- Because the channel exists, it supports a short circuit

$$I = K((V_{GS} - V_{th})V_{DS} - V_{DS}^2/2) = 0$$

$$I = K((V_{DD} - V_{th})V_{DS} - V_{DS}^2/2) = 0$$

Solved only by:

$$V_{DS} = 0$$

$$V_D = V_S = 0$$

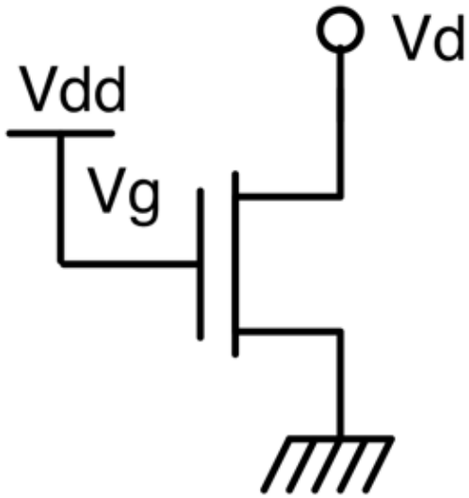

Fig.2.8.2. Open drained NMOS.

OPEN SOURCE TRANSISTOR

- This transistor is diode-connected
  - Necessarily saturated
- However, current is zero
- Solved only by:

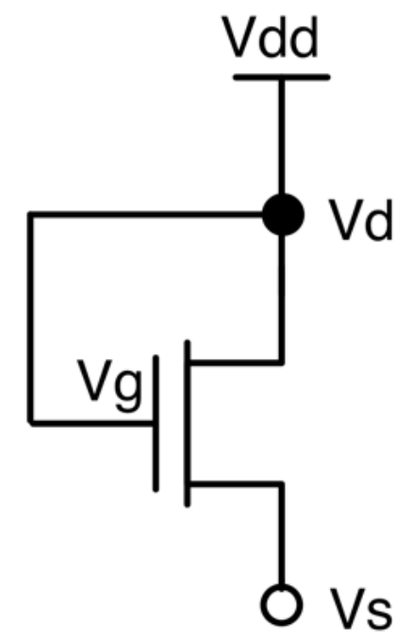

$$I_{sat} = K(V_{GS} - V_{th})^2 / 2 = 0$$

$$V_{GS} = V_{th}$$

$$V_{DD} - V_S = V_{th}$$

$$V_S = V_{DD} - V_{th}$$

OPEN SOURCE TRANSISTOR

- Is it not possible that Vs>Vdd-Vth?

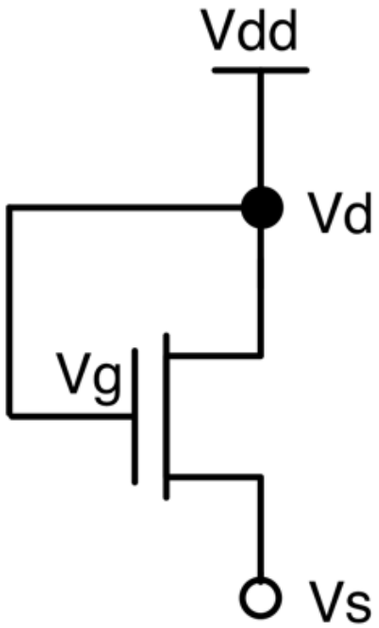

THE NMOS AS A SWITCH

- We can consider the two figures as an NMOS switch trying to pass ‘1’ and ‘0’
- The NMOS passes the ‘0’ correctly as 0V
- It passes a weak ‘1’ as Vdd-Vth

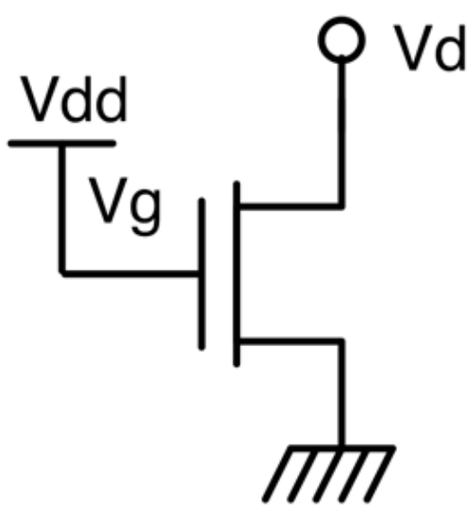

Fig.2.8.2. Open drained NMOS.

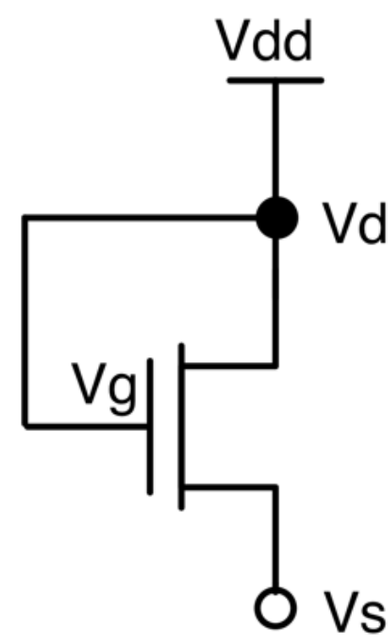

THE PMOS AS A SWITCH

- The PMOS is a mirror image of the NMOS
- It passes the ‘0’ as |Vthp|
- Passes Vdd as is
- This is highly suggestive

THE INVERTER

- Very similar to RTL inverter
- Only difference is in load
- Active load allows lower Vol with lower area

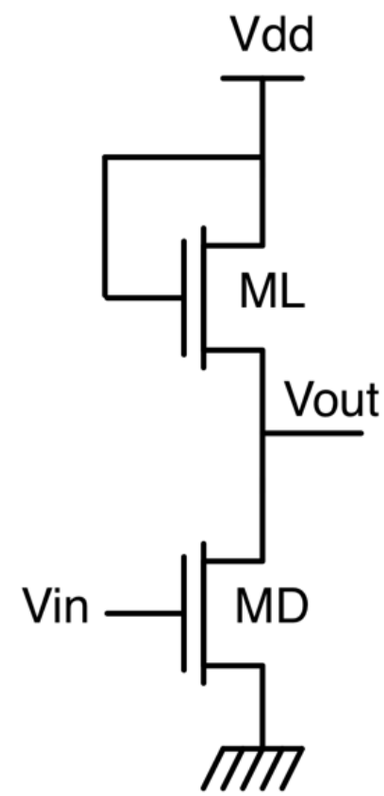

THE KCL EQUATION

$$I_{up} = I_{down}$$

$$I_{up} = I_{ML}$$

$$I_{down} = I_{MD}$$

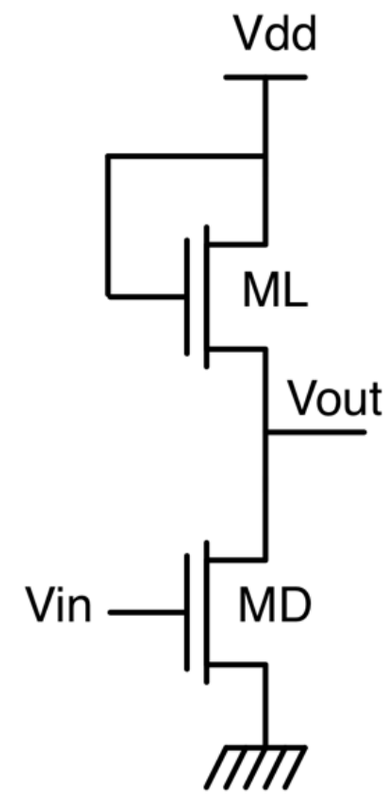

- Distinction made by region of operation

FINDING VOH

- Use Vin=0V (is this right?)

$$V_{out}(V_{in} = 0) = V_{DD} - V_{thL}$$

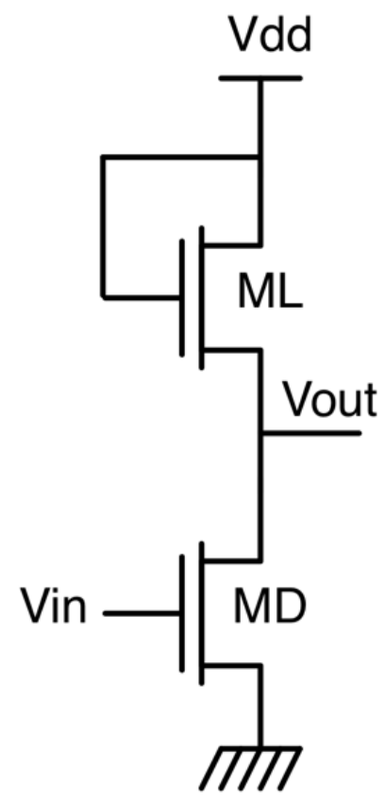

FINDING VOL

$$\frac{K_L}{2}(V_{DD} - V_{ol} - V_{thL}) = K_D((V_{DD} - V_{thL} - V_{th})V_{ol} - 0.5V_{ol}^2)$$

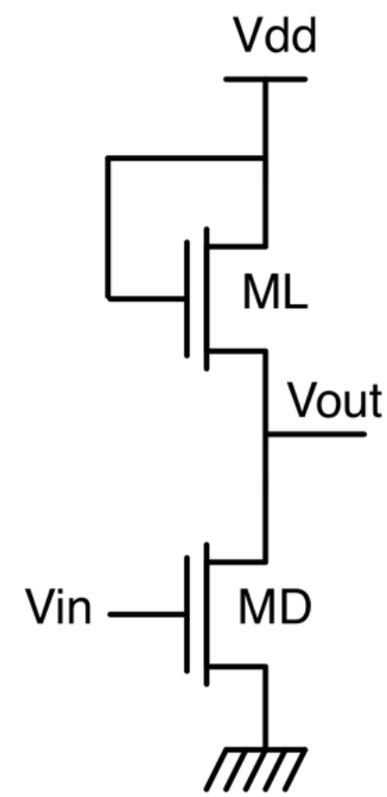

CONTROLLING THE VALUE OF VOL

- To lower Vol:
  - Increase (W/L)driver
  - Lower (W/L)load

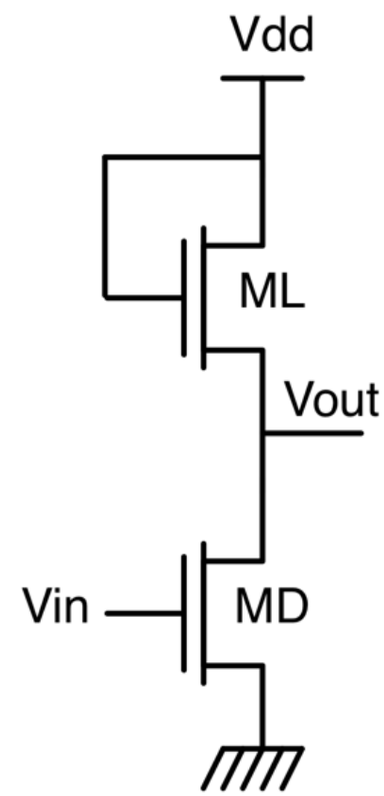

HOW ARE WE LIKING THIS

- We still cannot achieve Vol=0V
- We have also ruined Voh
- This is pretty bad but maybe the rest of the VTC looks good

STARTING POINTS FOR DRAWING ANY VTC

- The points (Vol, Voh) and (Voh, Vol) are defined
- Define Vin and Vout in terms of transistor terminal voltages
- Draw axes
- Mark transistor regions of operation under axes
- Mark known points and regions
- Determine transitions between regions
- Connect the curve

ENHANCEMENT LOAD VTC

- ML is saturated for the whole range
- At (Vol, Vdd-Vth) MD is cutoff
- At (Vdd-Vth, Vol) MD is ohmic

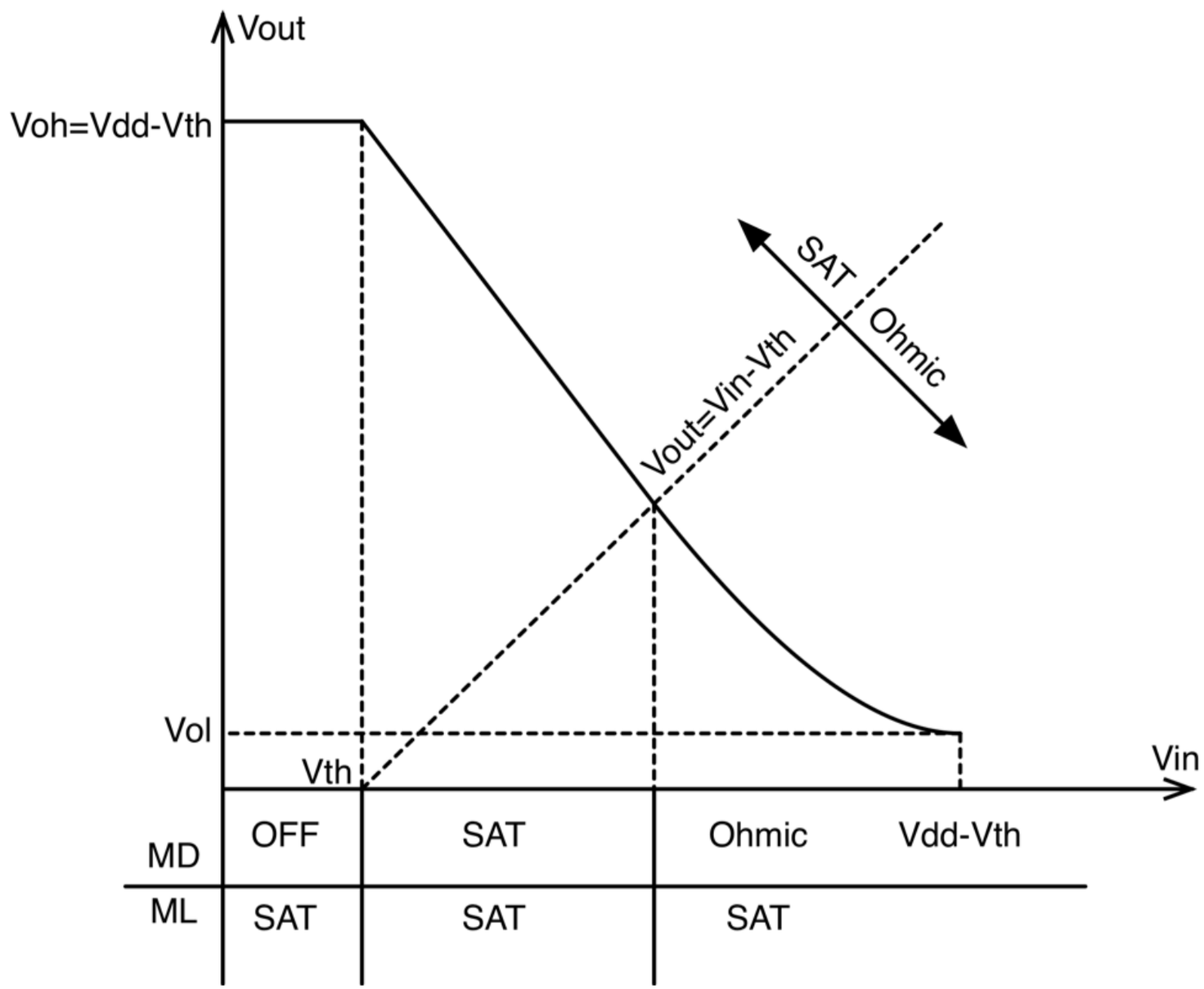

ENHANCEMENT LOAD VTC

- MD remains cutoff till Vin=Vthd
- When it turns on will it turn on immediately into ohmic?
  - Can answer without calculation

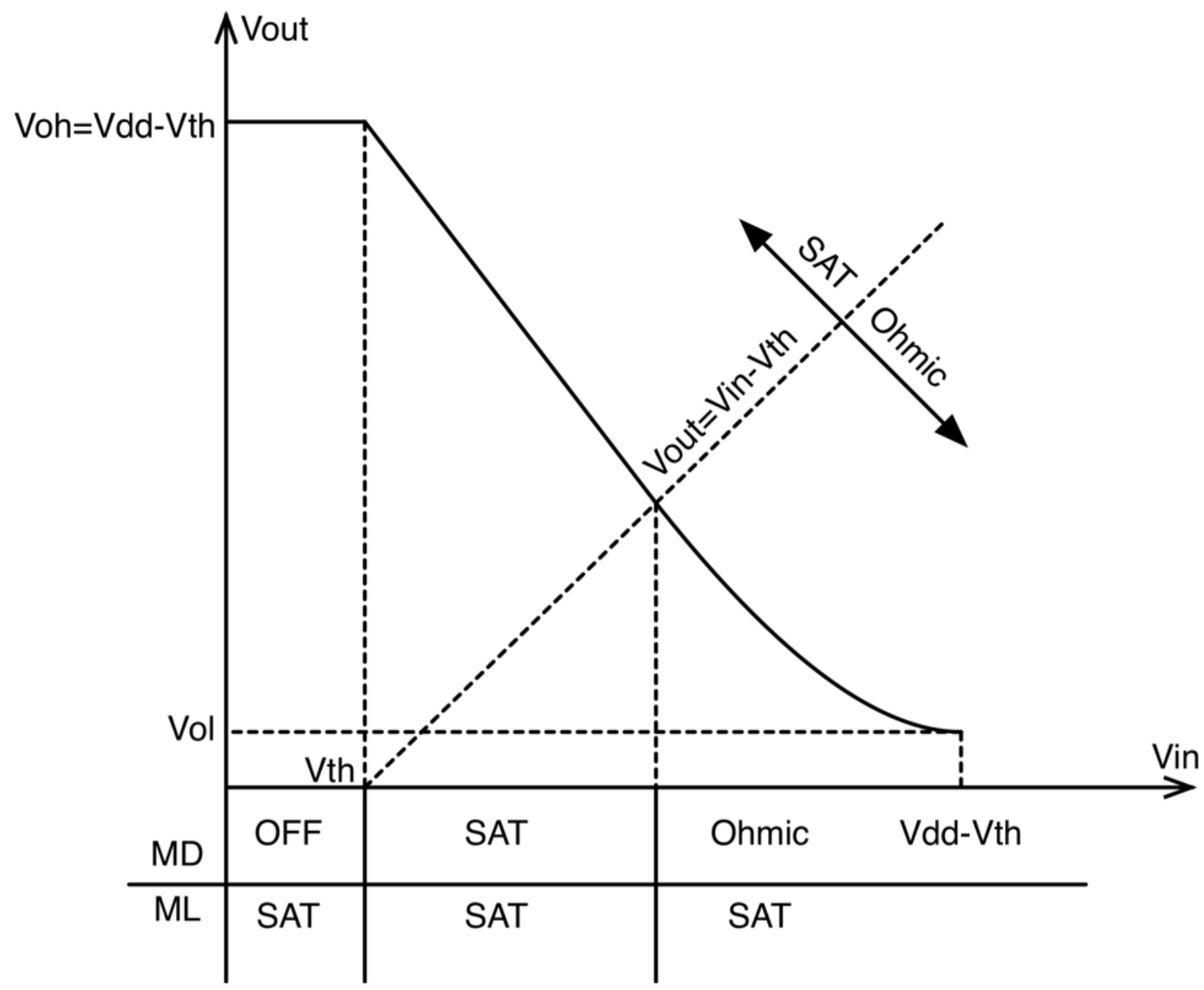

ENHANCEMENT LOAD VTC

- Determine the transition from sat to ohmic

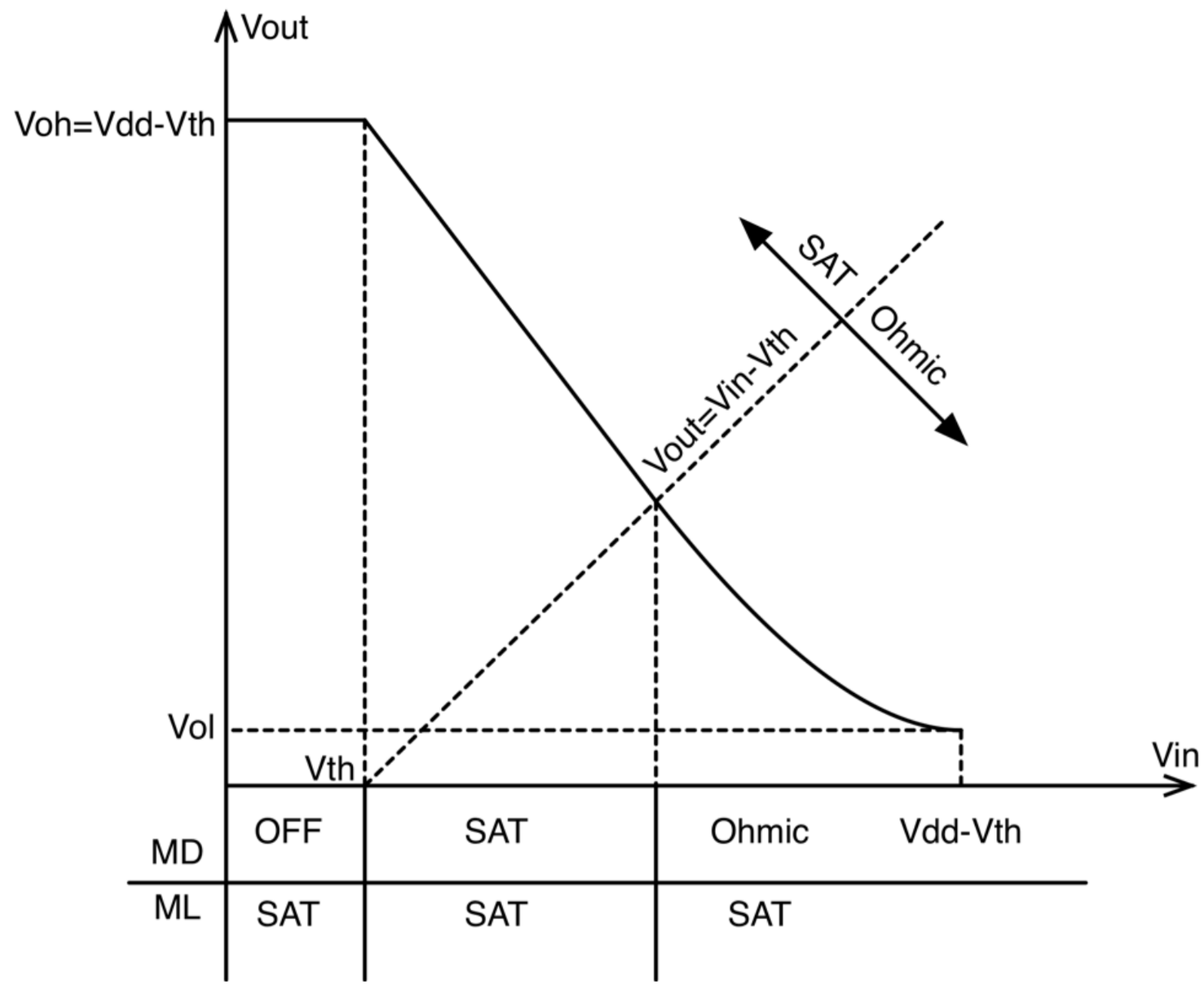

FINDING VM

- Determine region of operation
- What does this also tell us?

$$I_{MD}\Big|_{sat} = I_{ML}\Big|_{sat}$$

$$K_D(V_{in} - V_{th})^2 = K_L(V_{DD} - V_{out} - V_{thL})^2$$

$$K_D(V_m - V_{th})^2 = K_L(V_{DD} - V_m - V_{thL})^2$$

$$V_m = \frac{V_{DD} + (K_D/K_L - 1)V_{th}}{(K_D/K_L + 1)}$$

FINDING VIH

$$K_D((V_{in} - V_{th})V_{out} - 0.5V_{out}^2) = 0.5K_L(V_{DD} - V_{out} - V_{thL})^2$$

$$K_D V_{out} + K_D(V_{in} - V_{th})V'_{out} - K_D V_{out} V'_{out} = -K_L(V_{DD} - V_{out} - V_{thL})V'_{out}$$

$$K_D(2V_{out} - (V_{in} - V_{th})) = K_L(V_{DD} - V_{out} - V_{thL})$$

HOW ABOUT VIL

- The discontinuity forces our hand
- Why is there a discontinuity?

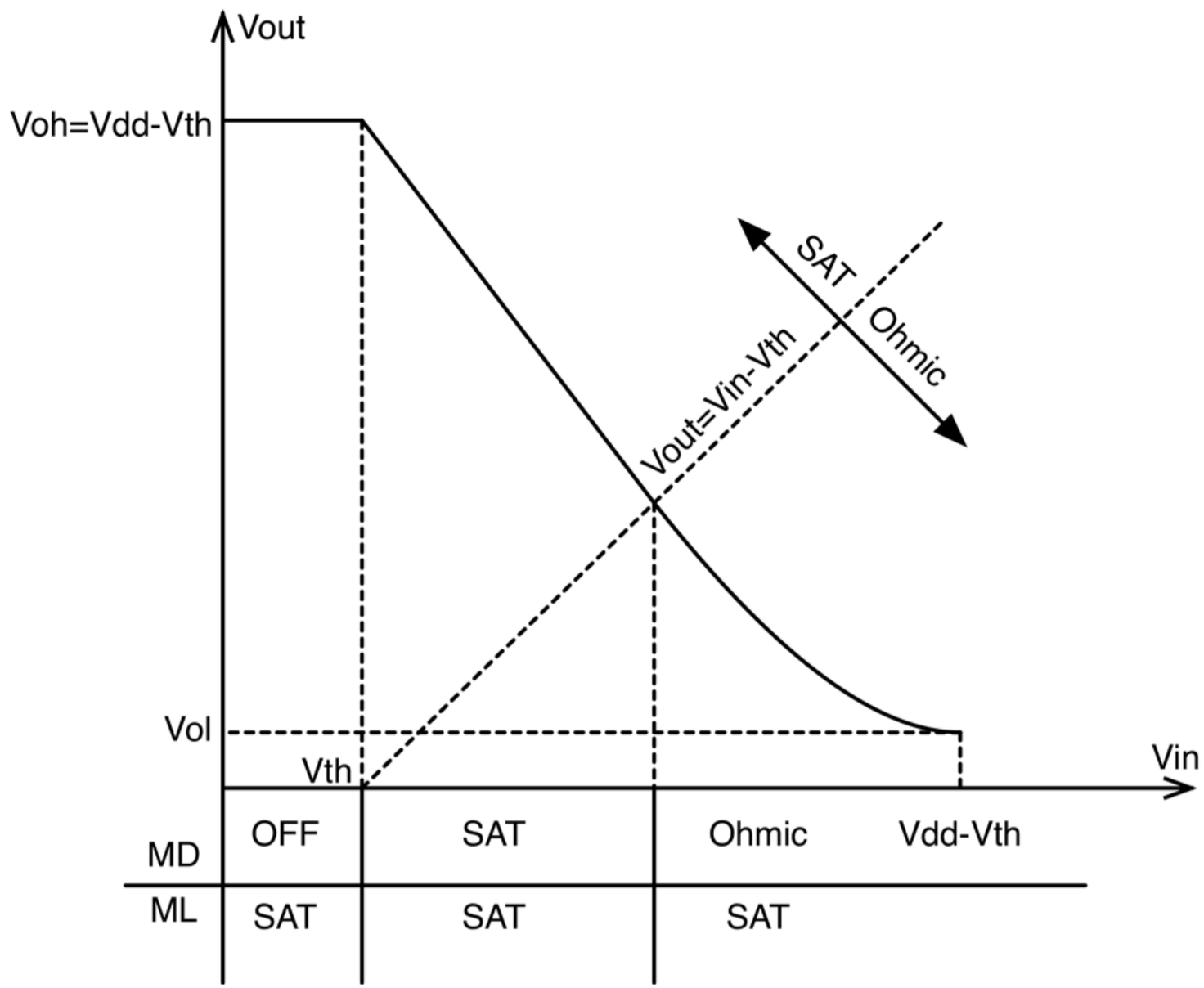

HOW DO WE JUDGE THIS VTC?

- The slope of the transition region is weak
- Vil is an extremely low value
- Vii is rather high due to the weak slope of the transition region
- Both Vol and Voh are not at the rail
- The noise margins are dismal

DEFINITION

- Static power is dissipated in the steady state
- Requires a static current (DC)
- Static current requires a path from supply to ground to exist in a steady state
- Static current is defined for noiseless I/Os only

WHERE IS STATIC POWER DISSIPATED?

- Power is dissipated only in resistors
- Resistance exists in the channels of transistors
- Thus power is dissipated in all transistors through which current flows

CALCULATING DISSIPATED POWER

- Power dissipated in a (anything) transistor is
  - Current*voltage drop
- To calculate total power calculate the sum of transistor powers
- This can (and will) become untenable for larger gates

CALCULATING SUPPLIED POWER

- Fortunately (for static power only) power supplied = power dissipated
- Thus total power supplied = total power dissipated
- Total power supplied = Vdd * current drawn from supply

INPUT STATISTICS AND POWER

- Static power is calculated for a stable input (and output)
- For an inverter there are two possible inputs (‘0’ and ‘1’)
- There are power dissipation values for both inputs
- The average power is the (weighted) average of the input powers

POWER IN ENHANCEMENT LOAD INVERTER

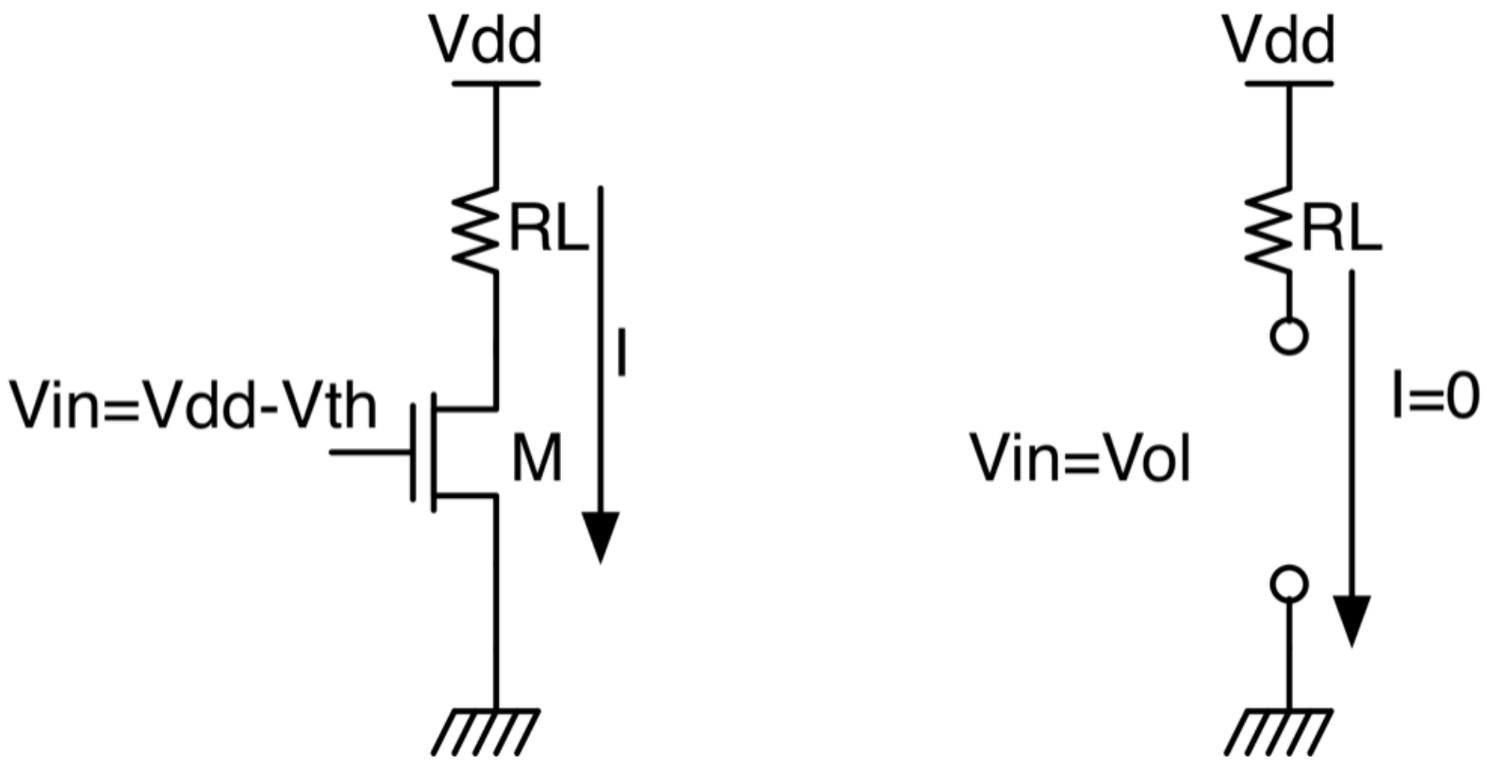

POWER IN ENHANCEMENT LOAD

$$P_H = I_{drawn} V_{DD} = 0 \,.\, V_{DD} = 0$$

$$I_{drawn} = I_L = 0.5 K_L (V_{DD} - V_{ol} - V_{thL})^2 = K_D((V_{DD} - V_{thL} - V_{th}) V_{ol} - 0.5 V_{ol}^2)$$

$$P_L = I_L V_{DD}$$

$$P_{dissipated} = 0.5(I_L V_{DD} + I_H V_{DD}) = 0.5 I_L V_{DD}$$

AN ENHANCEMENT LOAD GATE

- PDN = Pull Down Network
- A network of NMOS switches
- Responsible fo achieving ‘0’ in truth table
- All NMOS in PDN are drivers

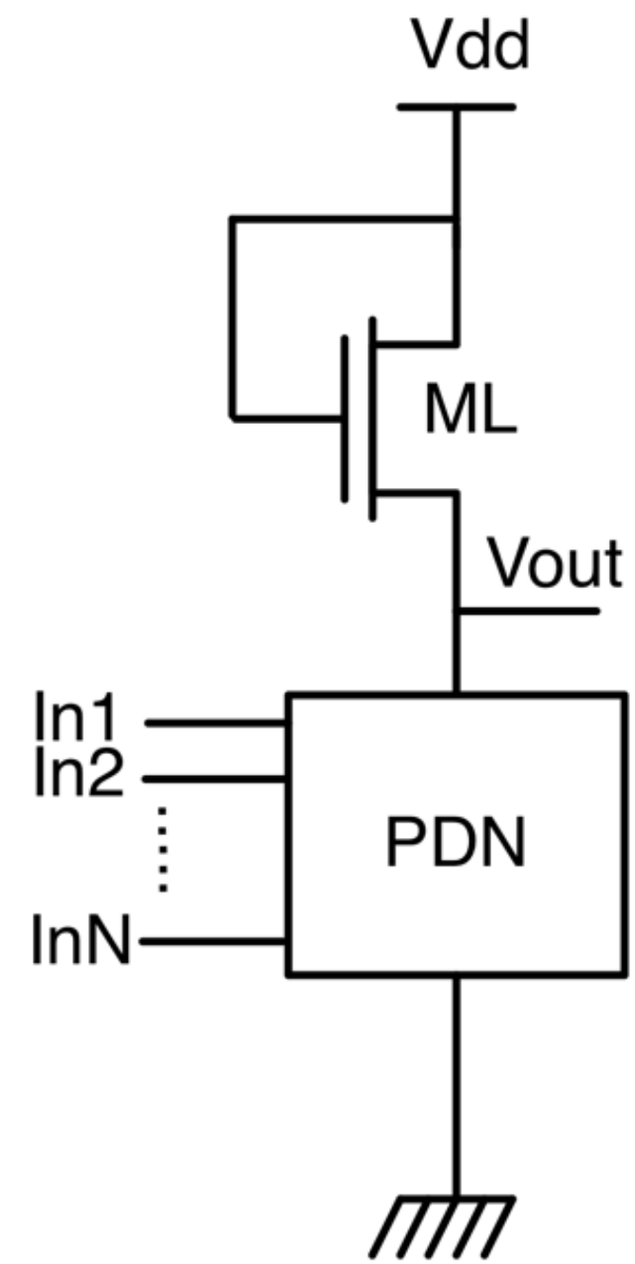

ENHANCEMENT NOR GATE

- PDN is parallel switches
- Expect OR but get NOR, why?

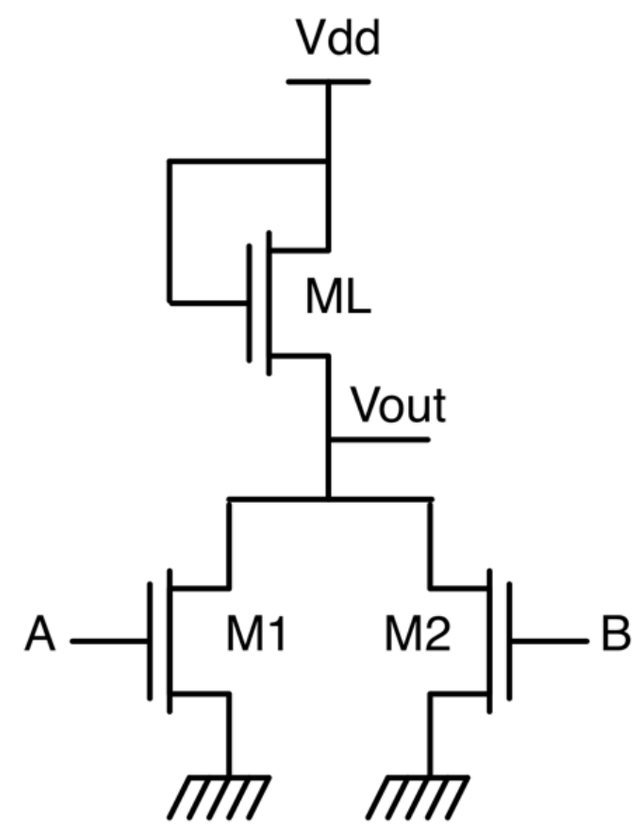

FOUR INPUT CASES FOR NOR

- Three of the cases look identical to the inverter

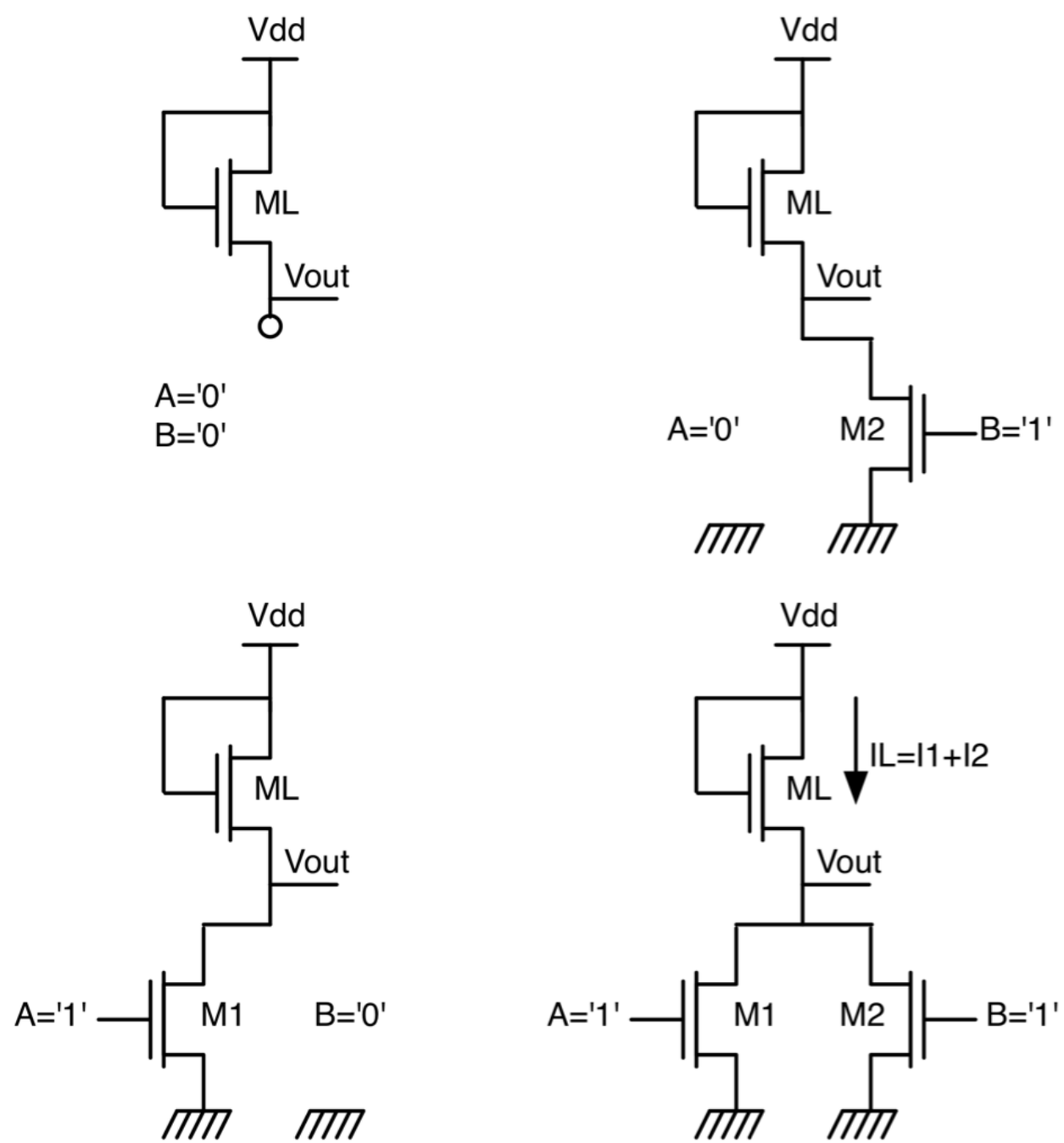

WHAT HAPPENS FOR AB="11"

$$AB = "11"$$

$$I_{ML}\Big|_{sat} = I_{M1}\Big|_{ohmic} + I_{M2}\Big|_{ohmic}$$

$$K_L(V_{DD} - V_{ol3} - V_{thL})/2 = K_1((V_{DD} - V_{thL} - V_{th})V_{ol3} - 0.5V_{ol3}^2) + K_2((V_{DD} - V_{thL} - V_{th})V_{ol3} - 0.5V_{ol3}^2)$$

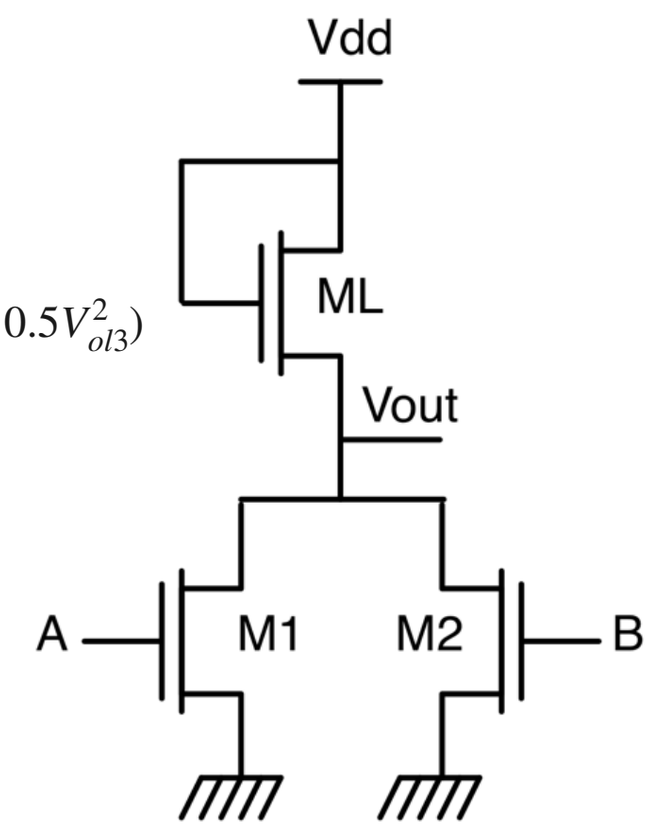

THE EQUIVALENCE OF PARALLEL TRANSISTOR SWITCHES

$$K_L(V_{DD} - V_{ol3} - V_{thL})/2 = (K_1 + K_2)((V_{DD} - V_{thL} - V_{th})V_{ol3} - 0.5V_{ol3}^2)$$

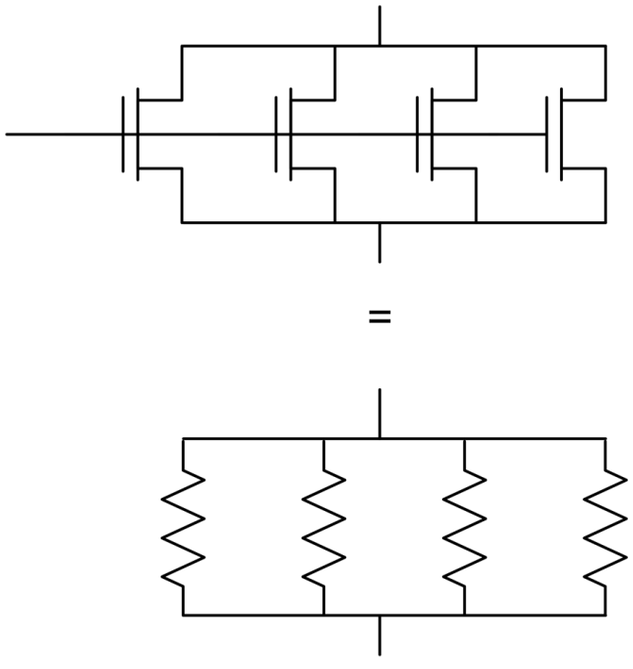

TRUTH TABLE FOR NOR GATE

AB	M1	M2	ML	Current	Logic out	Vout
00’	off	off	sat	zero	1’	Voh
01’	off	ohmic	sat	non-zero	0’	Vol1
10’	ohmic	off	sat	non-zero	0’	Vol2
11’	ohmic	ohmic	sat	non-zero	0’	Vol3

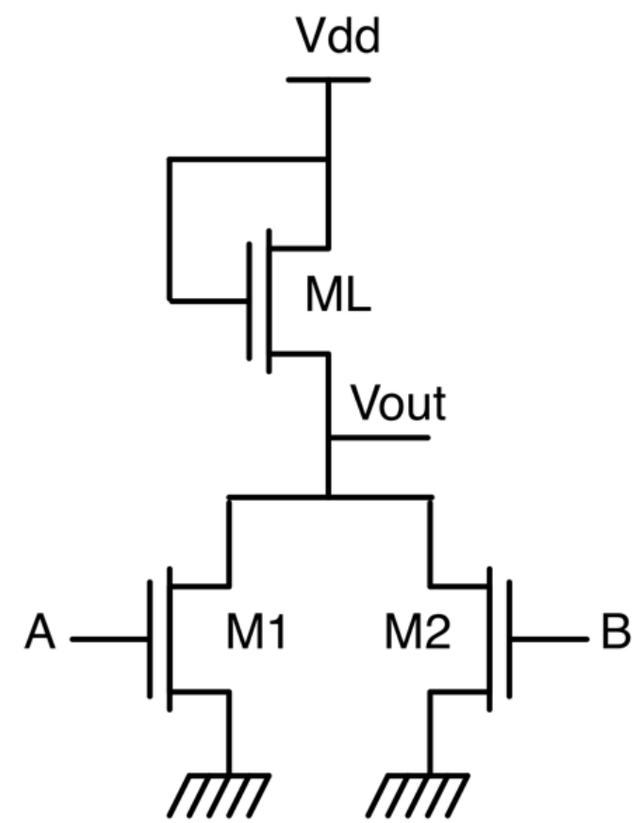

- Relate Vol1 to Vol2
- Relate Vol3 to Vol1 and Vol2

ENHANCEMENT LOAD NAND GATE

- Series connection leads to NAND

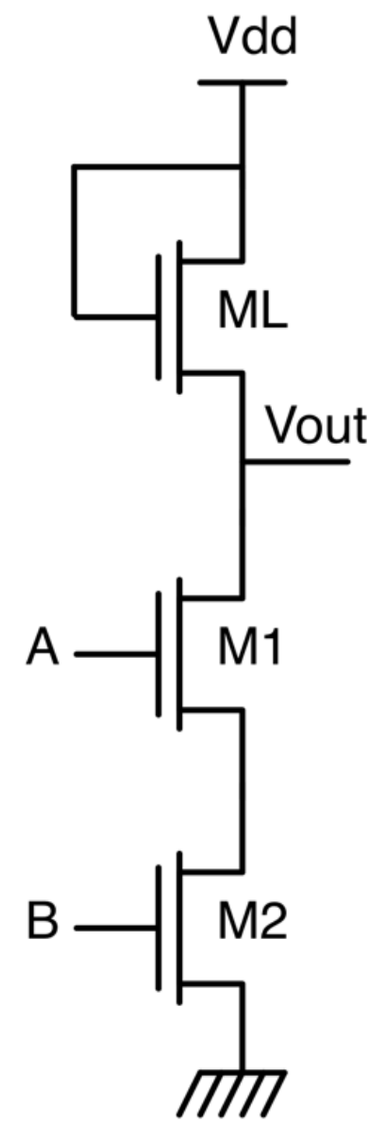

PARALLEL AND SERIES CONNECTION OF ACTIVE SWITCHES

$$(W/L)_{series} = 1/\sum_{all_MOSFET} 1/(W/L)$$

$$(W/L)_{parallel} = \sum_{all_MOSFET} (W/L)$$

THE FOUR CASES OF HAND

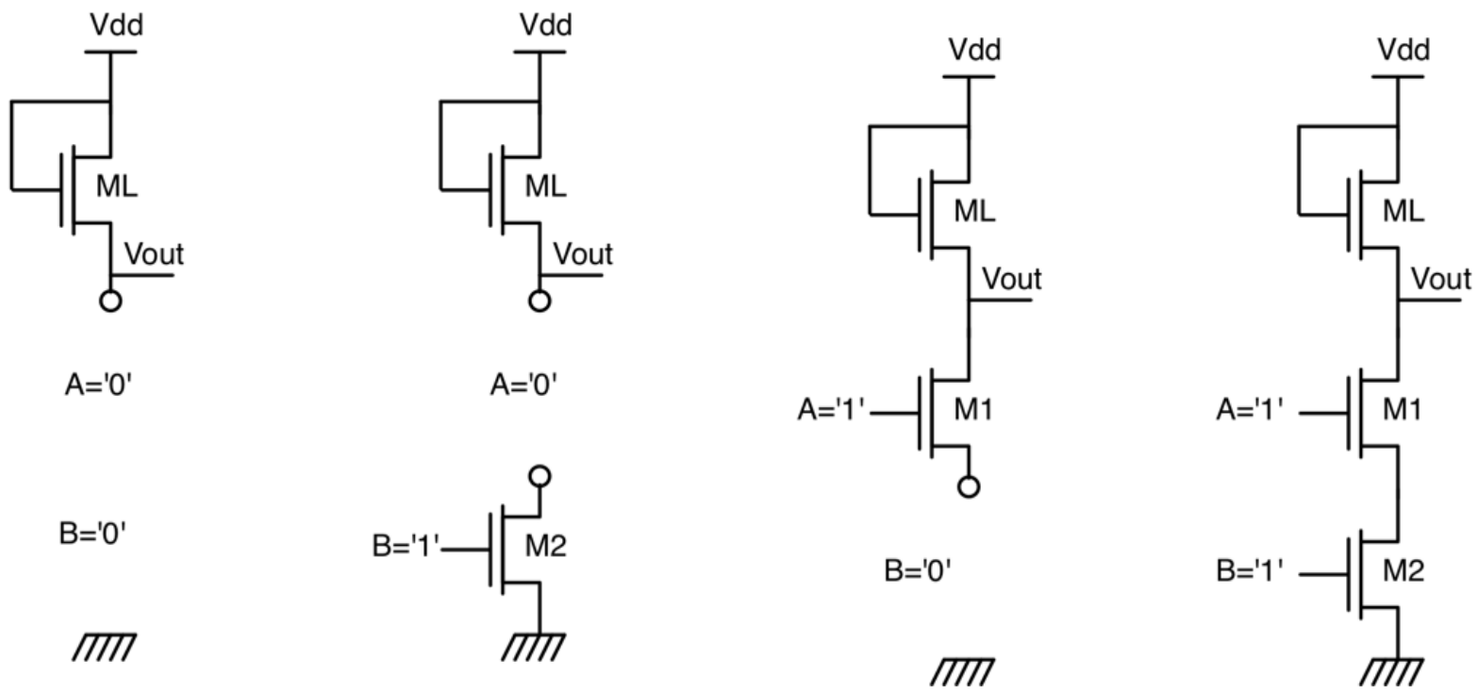

- Always solve using the ohmic-sate equation
  - With proper equivalent K

TRUTH TABLE FOR NAND

AB	M1	M2	ML	Current	Logic out	Vout
00’	off	off	sat	zero	1’	Vdd-Vth
01’	off	ohmic	sat	zero	1’	Vdd-Vth
10’	ohmic	off	sat	zero	1’	Vdd-Vth
11’	ohmic	ohmic	sat	non-zero	0’	Vol

THREE MAIN QUESTIONS

- Given a logic gate derive the function
- Given a function synthesize the gate
- Calculate Vol for different input combinations

DERIVING THE FUNCTION FROM A GATE

- Examine the PDN
- Write a function so that all . is AND and all + is OR
- Add an overall inversion to obtain the function

SYNTHESIZING A GATE

- Given expression of F
  - Obtain F’, use De Morgan if necessary to distribute inversions
  - Implement PDN where every and is a series connection and every or is a parallel connection
  - Add load
  - Obtain F at output

FOR EXAMPLE

- Implement $F=(AB+CD+CE)'$
  - Perform minimization if immediately possible
    - $F=(AB+C(D+E))'$
  - Obtain expression of $F'=AB+C(D+E)$

IMPLEMENT GATE AND OBTAIN OUTPUT F

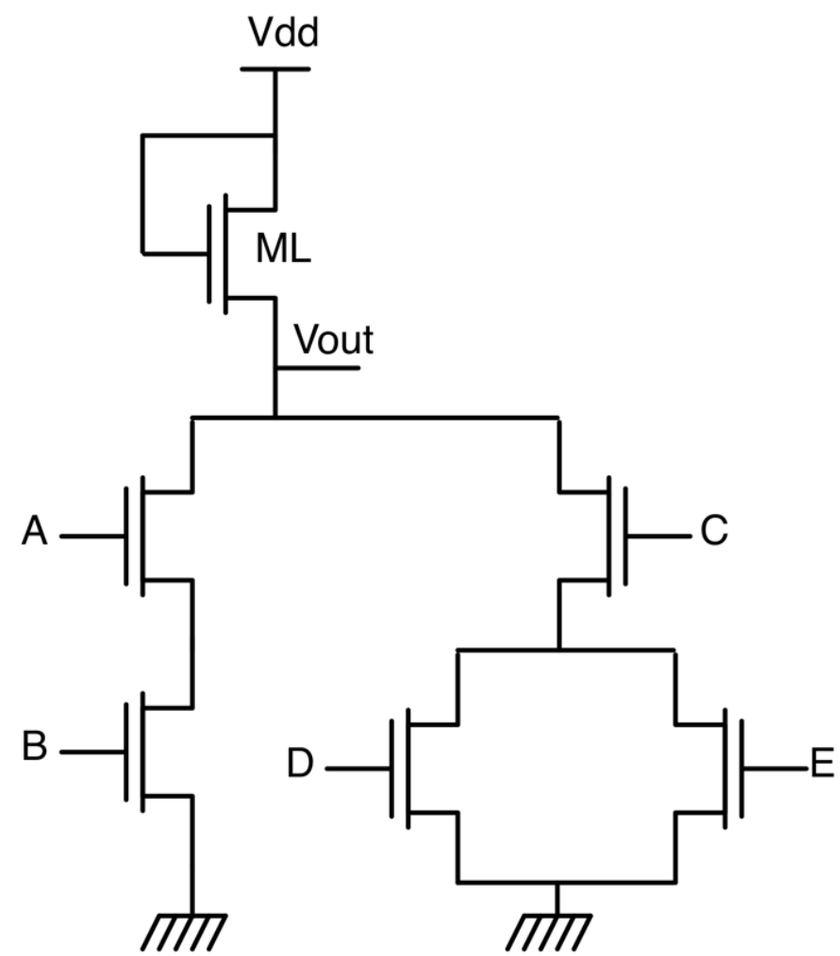

SELECTIONS FROM TRUTH TABLE

- By inspection when do we get ‘0’ at output?
- How to calculate the corresponding Vol

ABCDE	Active Branches	Current	Logic out	Vout
00000’	None	zero	1’	Vdd-Vth
01011’	None	zero	1’	Vdd-Vth
10100’	None	zero	1’	Vdd-Vth
11000’	AB	non-zero	0’	Vol1
11110’	AB, CD	non-zero	0’	Vol2
11111’	AB, CD, CE	non-zero	0’	Vol3
00111’	CD, CE	non-zero	0’	Vol4

FOR INPUT "11000"

$$K_{eq} = K_A K_B / (K_A + K_B)$$

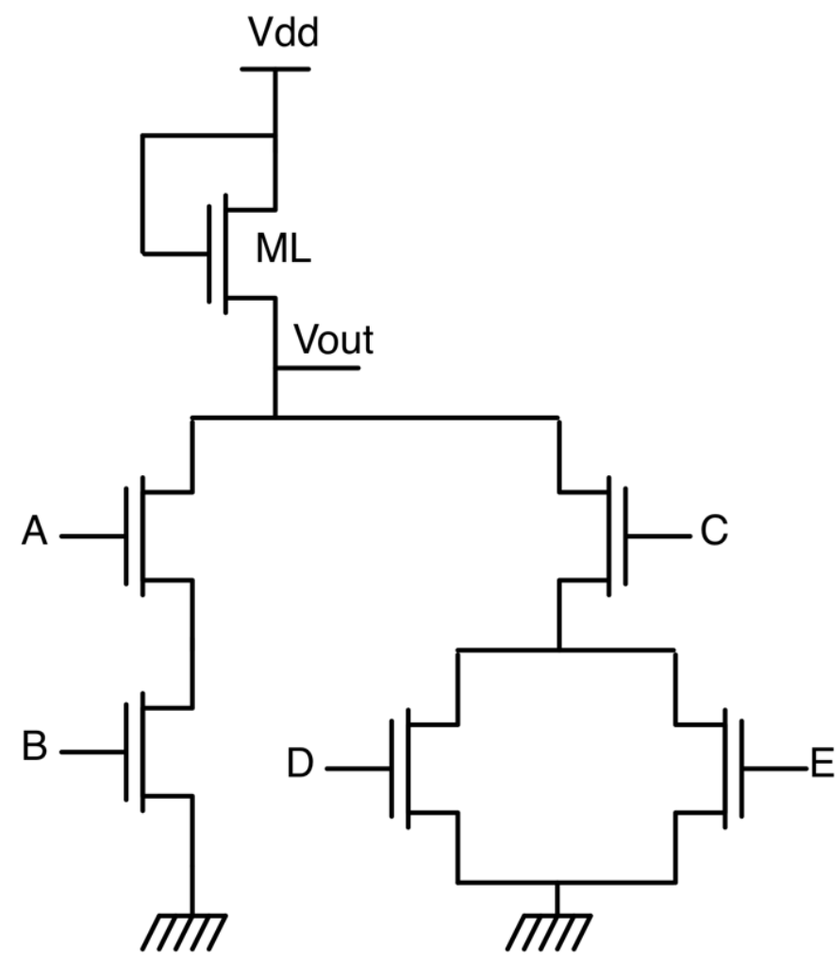

$$K_{eq}((V_{DD} - V_{th} - V_{th})V_{ol1} - V_{ol1}^2 / 2) = K_L (V_{DD} - V_{out} - V_{th})^2 / 2$$

DO WE DESIGN FOR WORST OR BEST CASE?

- What is the best case Vol?
- What is the worst case Vol?
- Which do we target by sizing?

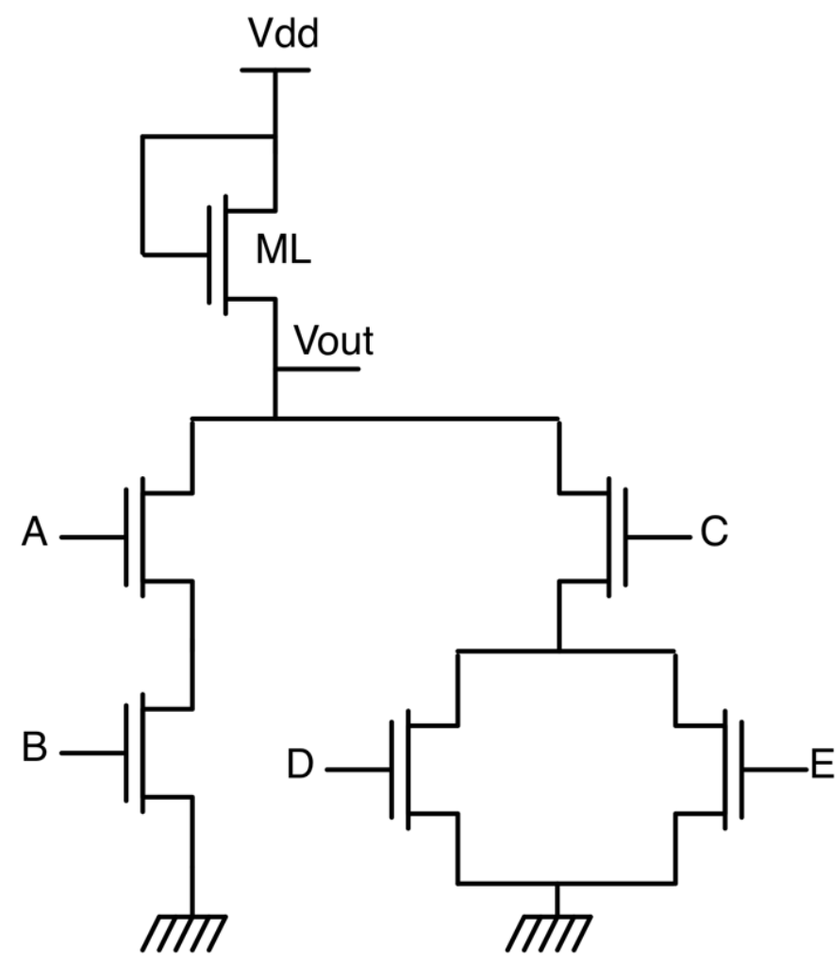

LIMITATION 1: RANGE OF VOH AND VOL

- We have failed to achieve Vol=0V
  - No load can solve this
- We can design an inverter with a PMOS driver
  - Achieves Vol=0V, but not Voh=Vdd

LIMITATION 2: WEAK SLOPE IN TRANSITION REGION

- It is dismal for enhancement load
- Better for depletion load and pseudo NMOS
- In all cases, the slope of the transition region is finite
- Combined with Vol, this reduces noise margins

LIMITATION 3: STATIC POWER

- For all ‘0’ outputs in the truth table there is a path from supply to ground
- Said path creates DC current
- Static power dissipation is enormous

LIMITATION 4: OUTPUT IS A FUNCTION OF SIZING

- At least one of the outputs is a function of transistor parameters
- Fabricating exact transistor sizes is hard
  - Matching is only a little easier
- “Clean” output values will be unpredictable

RATIOED LOGIC

- Any gate with the shown architecture will suffer all four previous problems
- Called ratioed logic
  - One of the output values is a function of transistor size ratios

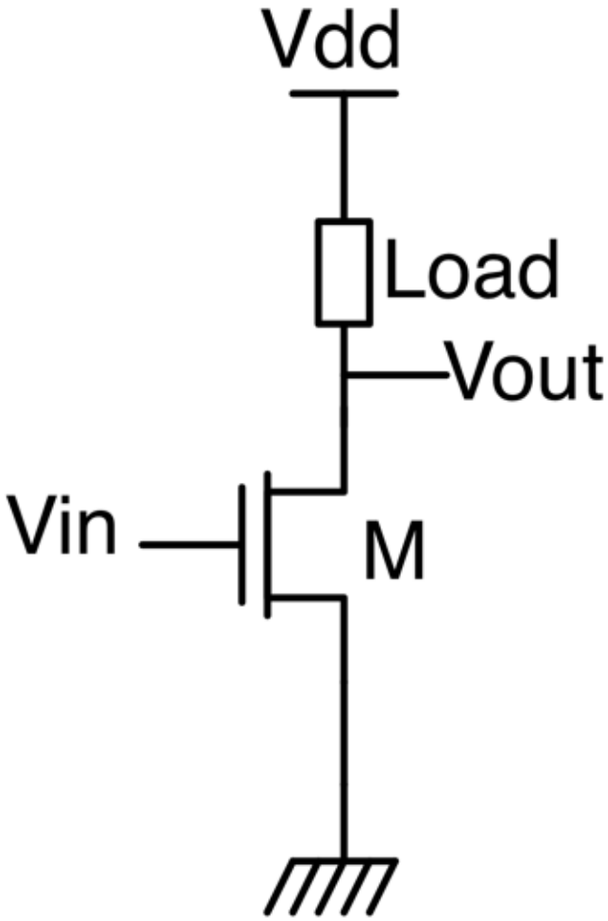

WHAT CAN WE DO ABOUT IT

- We tried different loads:
  - Passive resistor -> large area
  - Diode connected NMOS -> loss of Voh headroom
  - Depletion load -> hard to fabricate
  - PMOS load -> hard to fabricate
- We already have a hint about how to design a better inverter
  - NMOS passes strong ‘0’ only
  - PMOS passes strong ‘1’ only